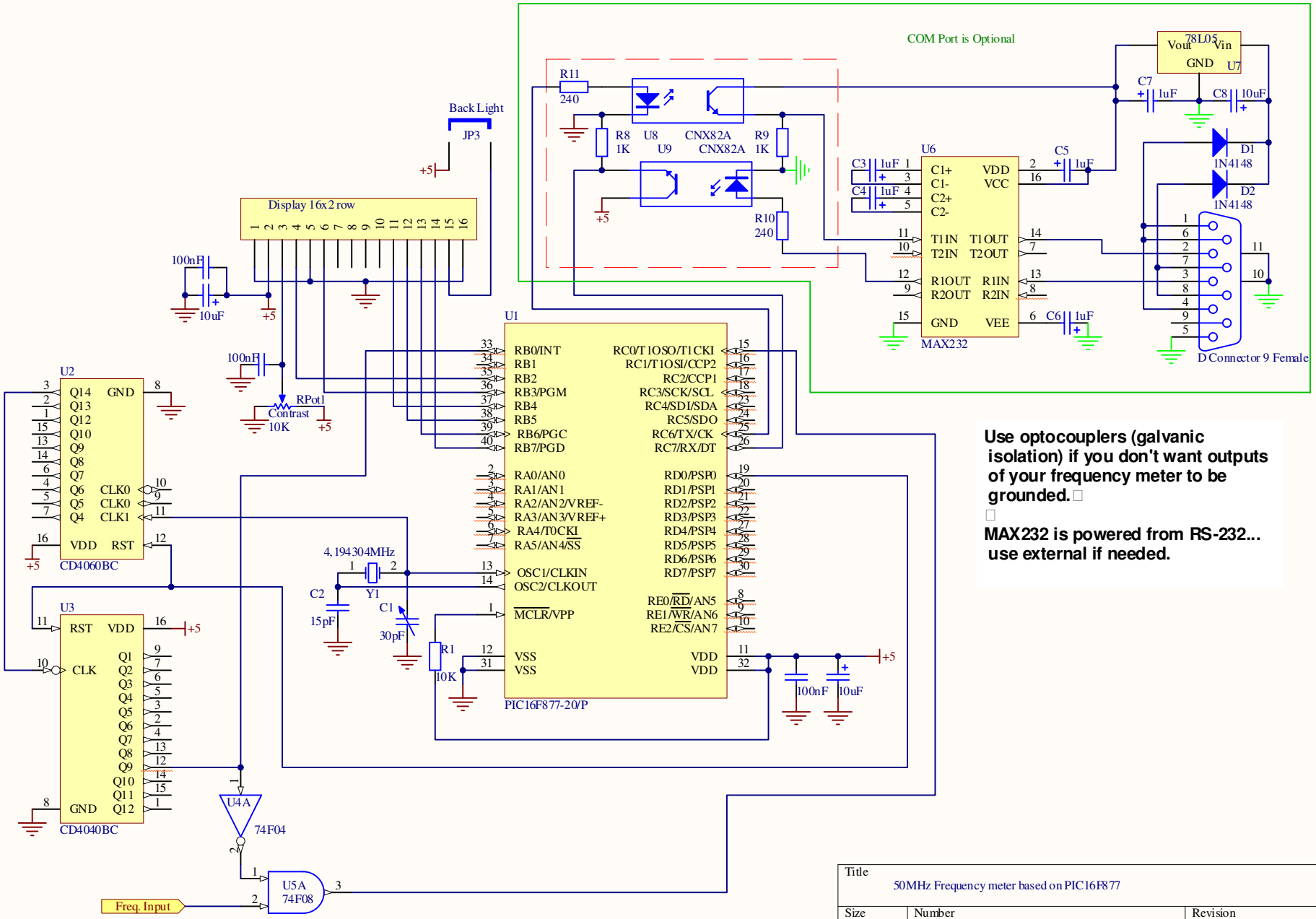

Use optocouplers (galvanic isolation) if you don't want outputs of your frequency meter to be grounded.

MAX232 is powered from RS-232... use external if needed.

Title	50MHz Frequency meter based on PIC16F877	
Size A4	Number	Revision 1.0
Date: 29.12.2011		Sheet of
File: D:\Proekti\..\Frequency Meter.SchDoc		Drawn By: Ar2r